My Design Philosophy

As an Interior Architect (M.S.), my practice focuses on proactively solving the next decade's challenges through environmental-centric design. I utilize immersive space creation to subtly foster user awareness and responsibility. Specializing in adaptive reuse, sustainable methods, and historical renovation, I refine my forward-thinking methodology using AI as a critical design thinking tool.

Welcome to TheXuSpace, my design brand. This portfolio showcases diverse work—including projects from RH, my graduate's thesis on floating architecture and interiors, commercial and hospitality studio designs, and furniture/photography explorations—all presented alongside the interdisciplinary art and architectural practice that shapes my comprehensive perspective.

"Sustainability can't be like some sort of a moral sacrifice or political dilemma or a philanthropical cause. It has to be a design challenge."

— Bjarke Ingels

CONTENT

RH
RESTORATION HARDWARE

RH Residential Design
Selected project

Graduate Thesis :
Iceberg Haven

Hospitality Studio :
La Belle Élégance

Commercial Studio:
Le Haus Creatives

Furniture Studio :
Escher' Cedar

Photography :
RoamwithPete

RH RESIDENTIAL DESIGN PROJECT

PRIVATE CLIENT - MAINE
TOTAL INVESTMENT : 700K

ENVIRONMENT

ARCHITECTURE

PALETTE

DESIGN INSPIRATION

ASSISTED SENIOR DESIGNER WITH FLOORPLANS, ELEVATIONS AND RENDERINGS

SELECTED ELEVATIONS

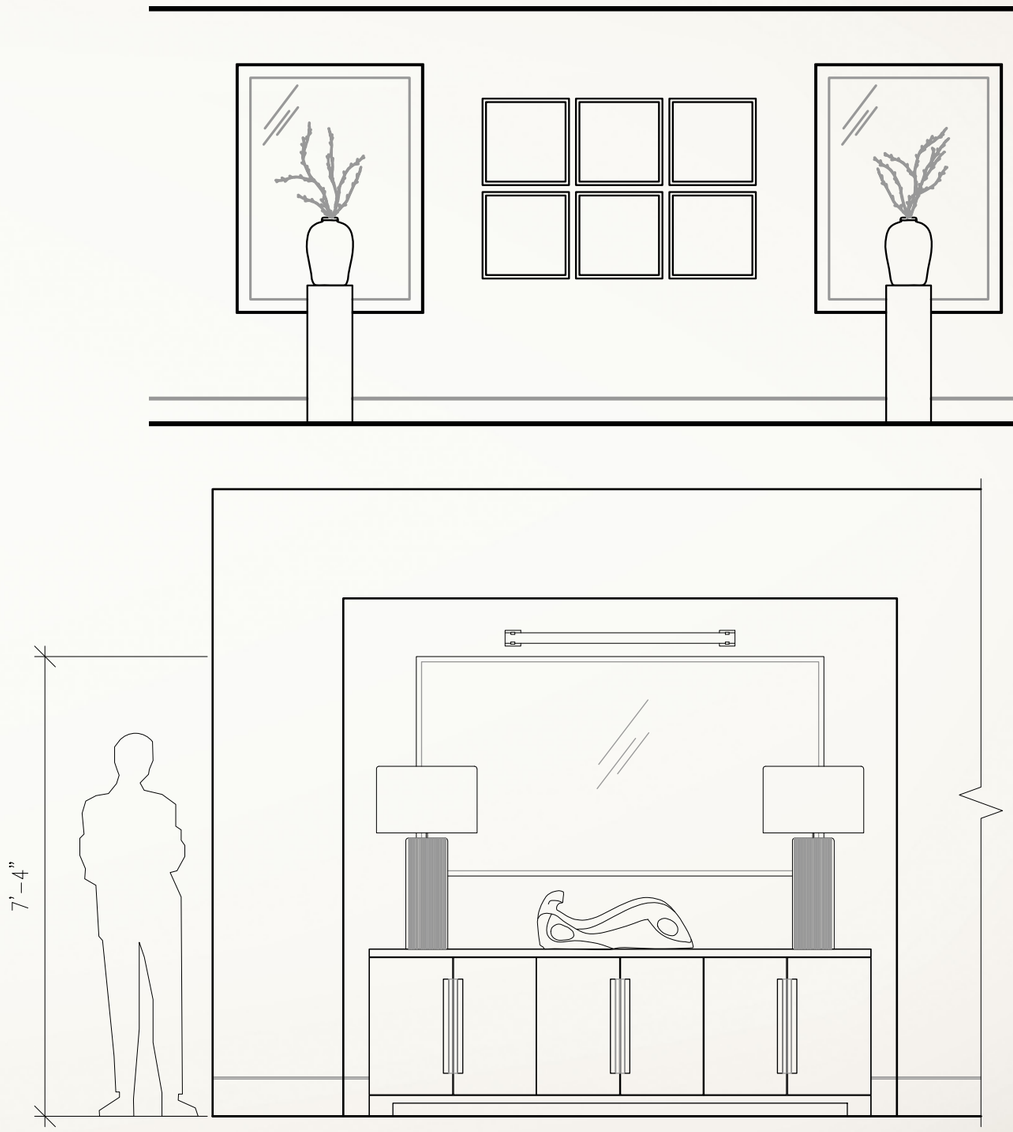

Iceberg Haven

Copenhagen, Denmark

Graduate Thesis - Beyond the waves
Exploring the Sustainable future through floating Interior Architecture in the face of Rising Sea Level

Please find the full version of my thesis here :
https://drive.google.com/drive/u/1/folders/1rsCdI5RI-s0IFfwzs57xKsUNk2KJD8c25

TheXuSpace Portfolio

Project Overview

The Iceberg Haven proposes a sustainable, adaptive design solution located on the central canal in Copenhagen, Denmark. This concept aims to establish a social hub where both locals and tourists can engage with Copenhagen's historic waterways while gaining awareness of the existential challenges posed by rising sea levels.

The project's name is its purpose: "Iceberg" signifies a tangible outcome of global warming, while "Haven" denotes a resilient refuge. This combination evokes urgency and adaptation, defining the floating architecture as an educational tool for climate change awareness.

Master Plan Diagram

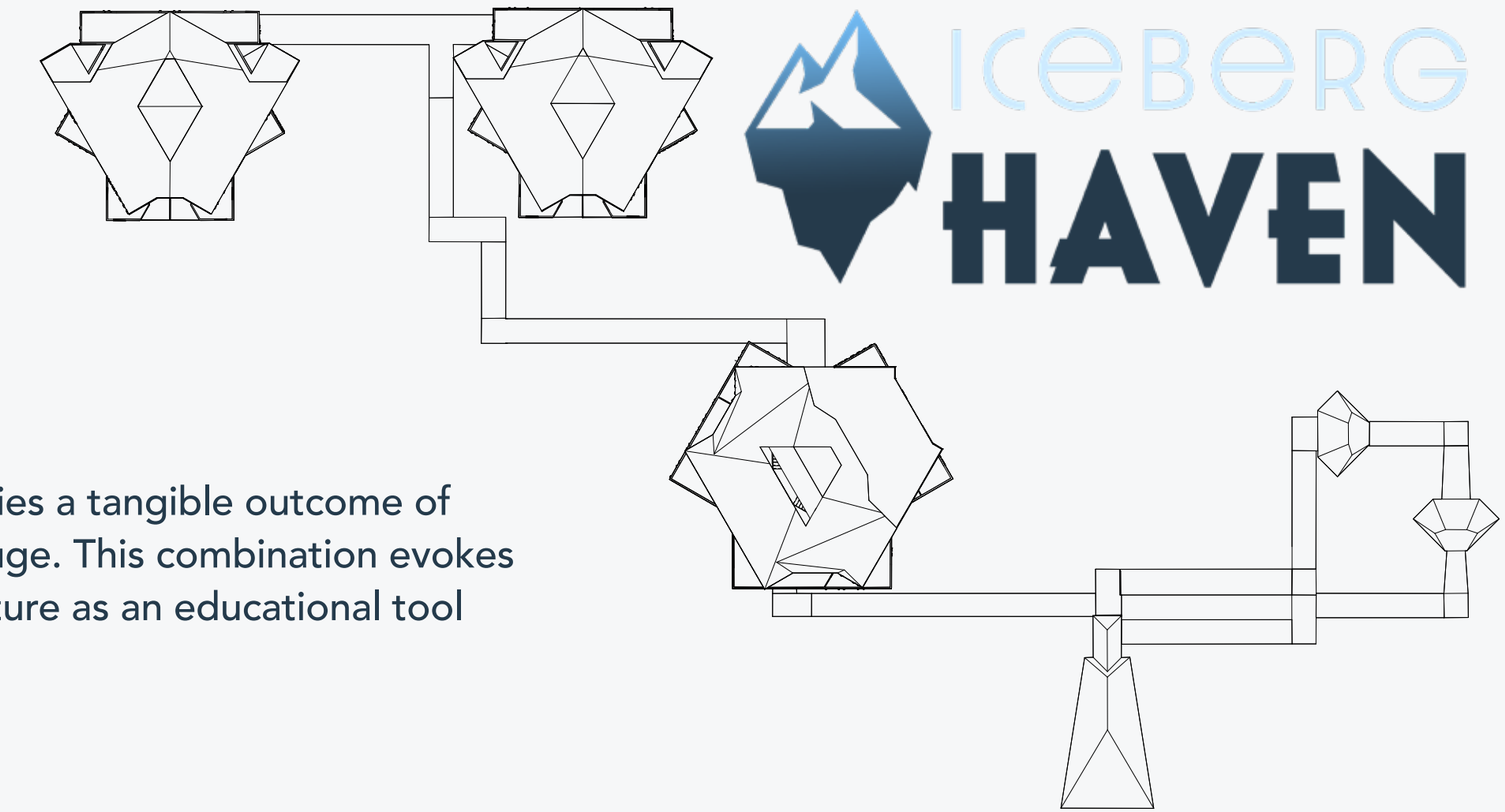

ICEBERG HAVEN

Site Elevation

Modular Organization

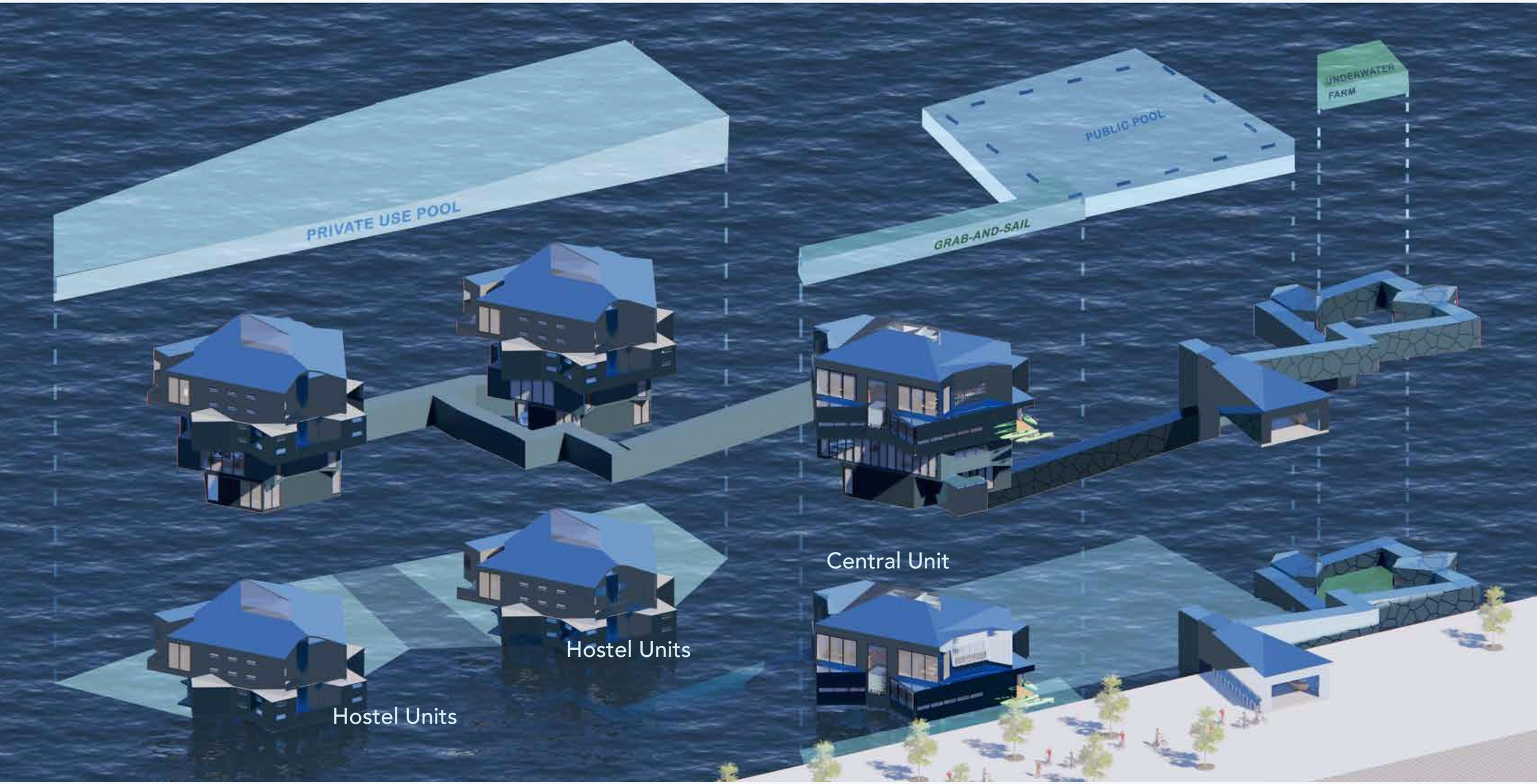

Hostel Units : Provides bi-level private suites and three-person capsule rooms. Includes exclusive amenities for guests, such as an underwater cinema and dining area.

Central Unit : The public, centrally-located unit, accessible via both land and water. Amenities include a bi-level tavern, three saunas, and a sundeck.

Immersive Feature: The Iceberg Staircase

The Iceberg Staircase serves as a central, immersive feature. Its design begins with a solid, imposing form on the lower floors, which gradually transitions into a dissolving structure as users ascend. This architectural journey symbolizes the process of a melting iceberg and the critical impact of global warming.

Central Unit Section

Iceberg Staircase Section

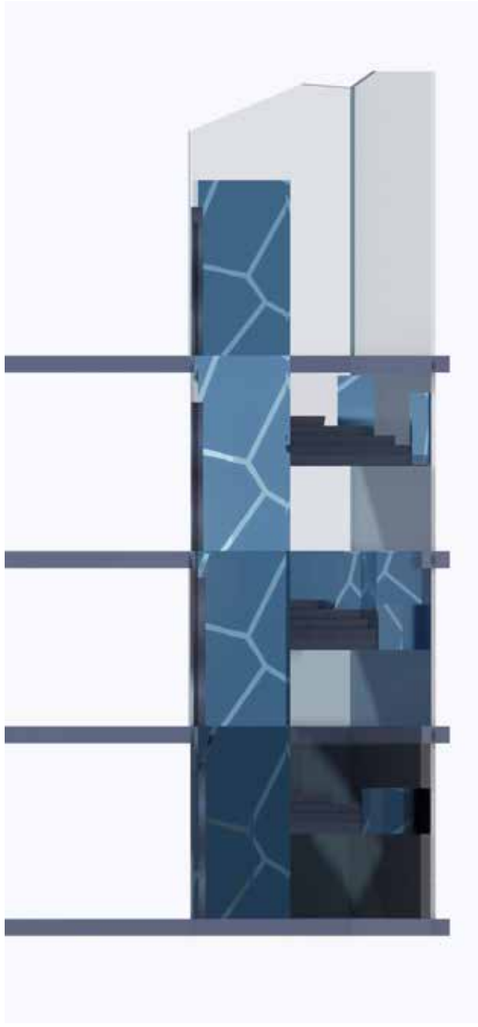

La Belle Élégance

229 Arch St, Philadelphia

Heritage & Hospitality

TheXuSpace Portfolio

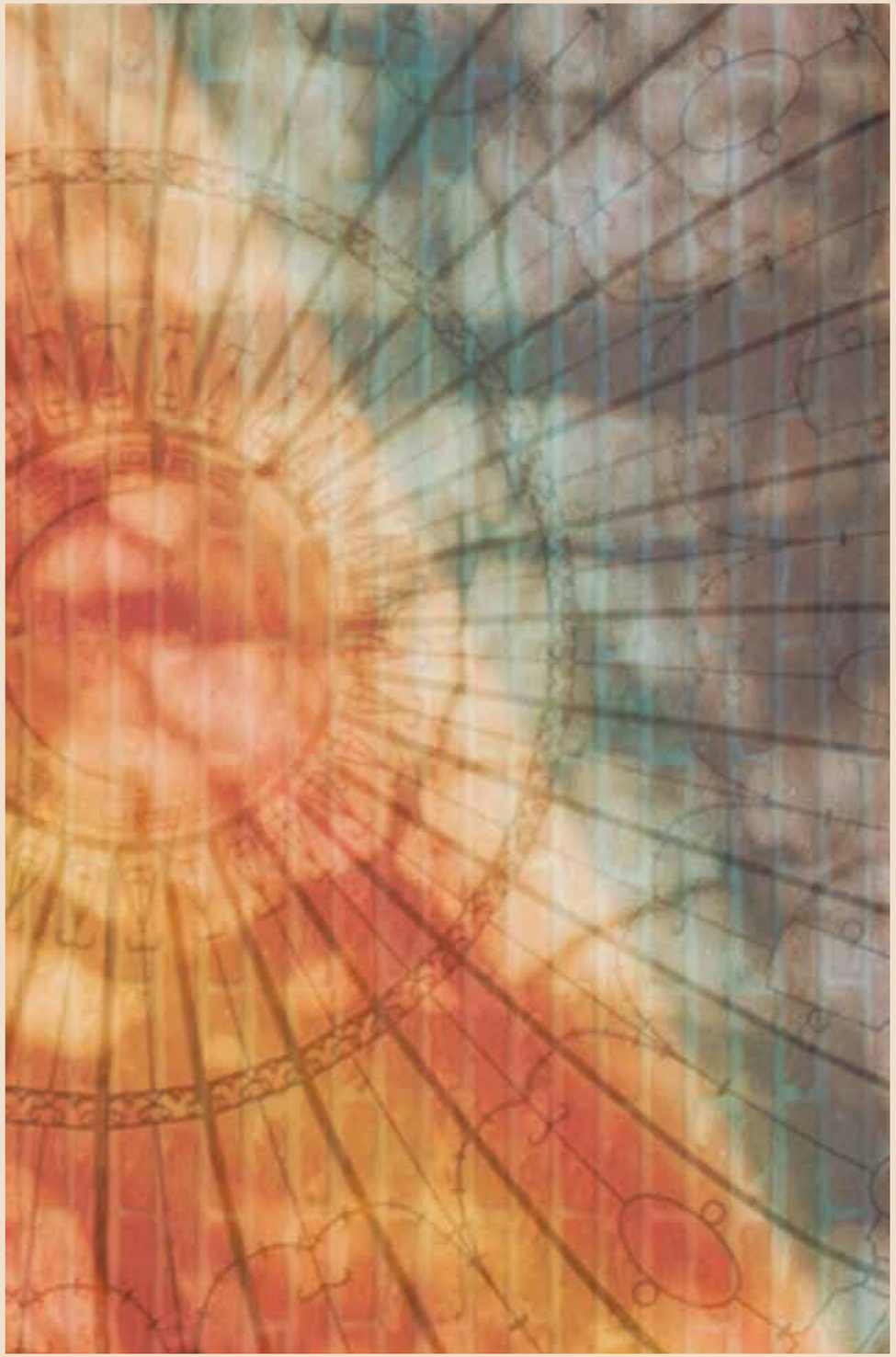

Concept Collage

Timeless Quarters - A Heritage Hospitality Experience

La Belle Élégance is an Adaptive Reuse project that transforms the historic Berger Building in Old City, Philadelphia. The core objective is Adaptive Reinterpretation: merging the building's robust, early 20th-century industrial heritage with the demands of luxury hospitality. Anchored by a signature French-inspired restaurant and bar, La Belle Élégance serves as an elegant, preserved gateway to Philadelphia's rich architectural legacy.

Material Selections

Dark Walnut

Calacatta Mint

White Marble

Antique Brass

Color Schemes

Restaurant & Bar

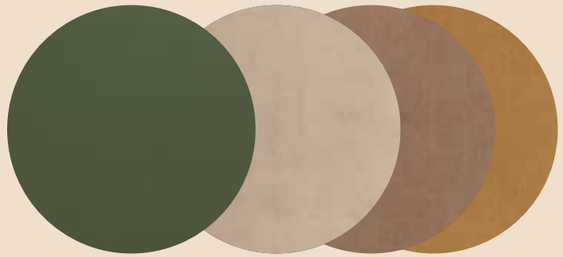

Hotel Lounge & Rooms

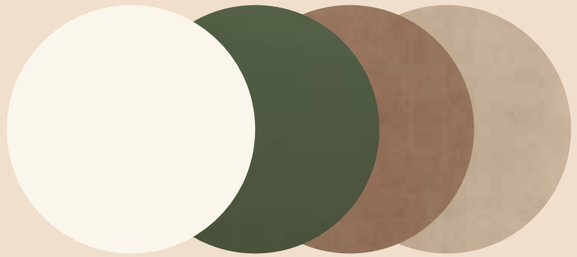

Rendering via Sketchup and Diffusion (AI)

Dining at La Belle Élégance:

Floor Plan and Interior Experience

LerHaus Creative - The fusion of Adaptive and Heritage

Public Gallery and Private Residency Plans

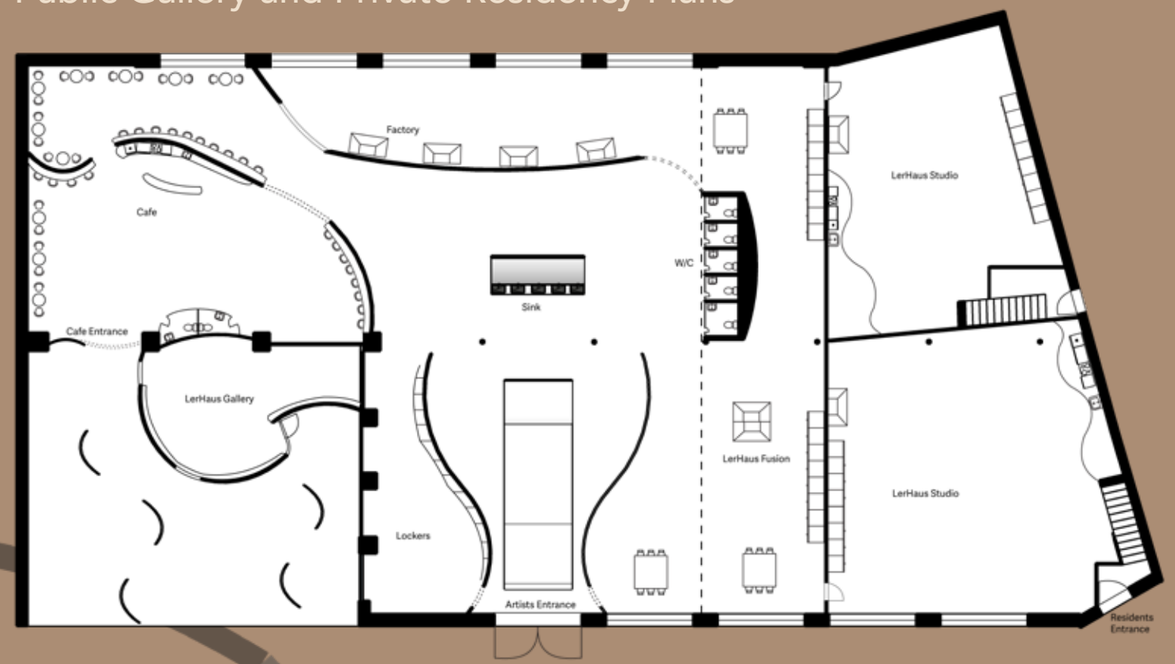

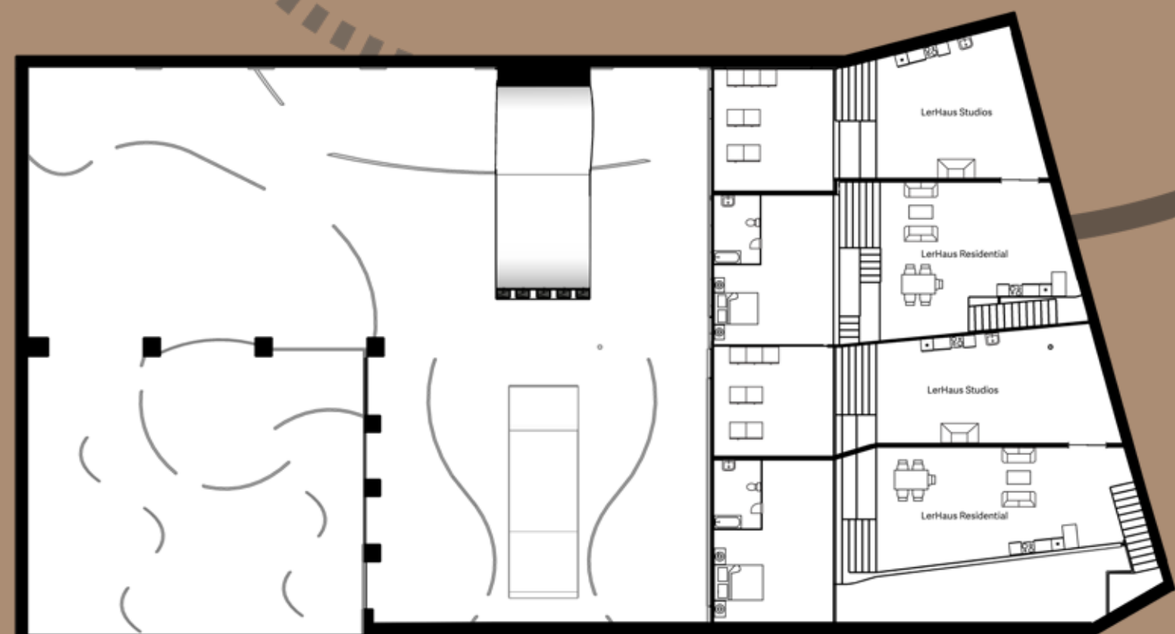

LerHaus Creative is an Adaptive Reuse project that transforms a significant piece of 18th-century industrial heritage—a former train depot center—into a contemporary mixed-use facility.

The integrated program balances private artistic residency with public engagement, featuring a residential loft/studio upstairs and a public-facing gallery and café below. The space is defined by its unique fixtures, notably the custom-designed "Cascade" installation. This fixture serves as the central focal point of the space while fulfilling a crucial sustainable function as the building's primary rainwater collector.

Material Selections

Oak Wood

Concrete

Frosted Glass

Clay Plas-ter

Color Schemes

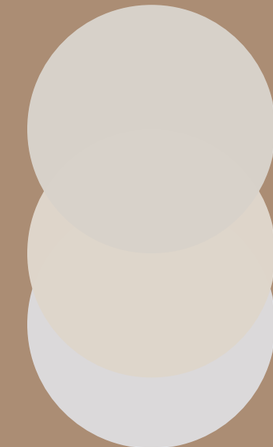

LerHaus Creative - Defining Function and Form

Concept Collage

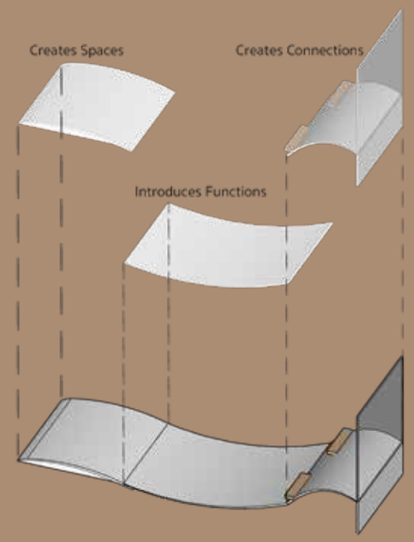

Cascade Commons

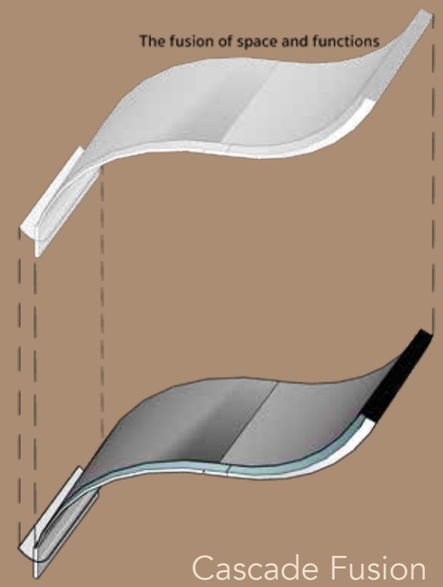

Cascade Fusion

The **Cascade Commons** creates a welcoming area for artists to gather and communicate, featuring elements of original bricks recovered from the train depot building.

The **Cascade Fusion** fulfills a crucial sustainable role by collecting and recycling rainwater. This rainwater is channeled for use in the artist's cleanup sink and building bathrooms, defining a unique aesthetic that supports the facility's functionality and environmental goals.

Rendering via Sketchup and Diffusion (AI)

The **"Escher's Cedar"** chair is a pure example of handmade craftsmanship, conceptually inspired by the continuous, geometric illusion of the **Penrose staircase**. Constructed from solid cedar, the chair's structure masterfully utilizes **traditional Mortise** and **Tenon** and **Lap Joints** to achieve seamless structural connections, eliminating the need for visible hardware. This refined joinery highlights the wood's natural warmth, allowing the cedar's distinctive tree rings and character to become the primary aesthetic feature.

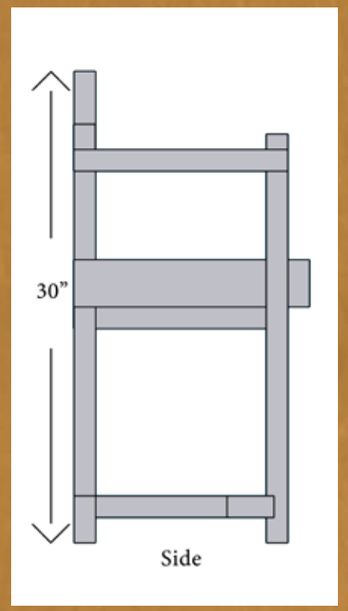

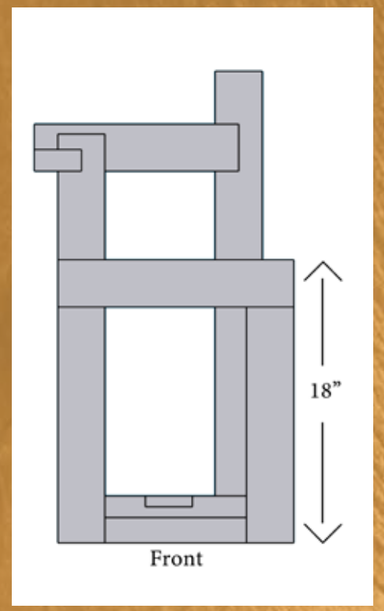

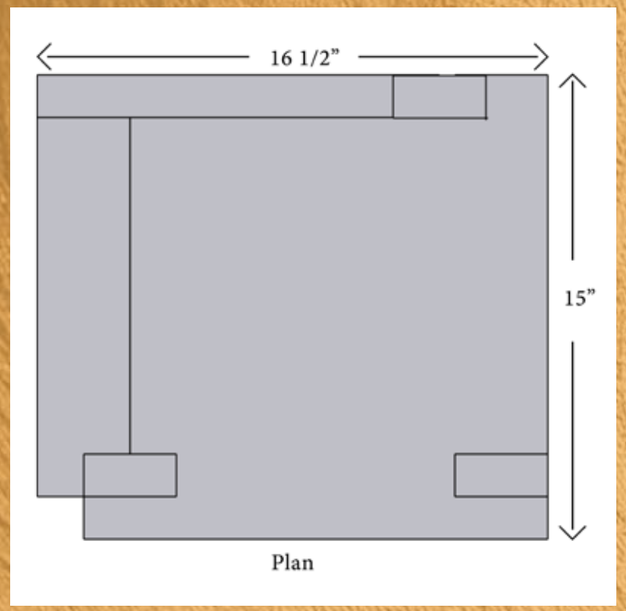

RoamWithPete

Photography & Film

My passion for photography & film was ignited in 2019 during my travels, where I began capturing sightseeing experiences. This practice quickly evolved into a study of diverse cultural and natural landscapes as seen through my lens.

Each shot, taken from a unique angle, has inspired my future designs and enhanced my understanding of composition, color, and perspective. Exploring different scales and compositions through the lens encouraged me to tell a story—a fundamental skill I have since extended to interior design. Crucially, years of travel allowed me to connect with local communities and cultures, experiencing their architecture and environments not as a tourist, but through a shared human lens.

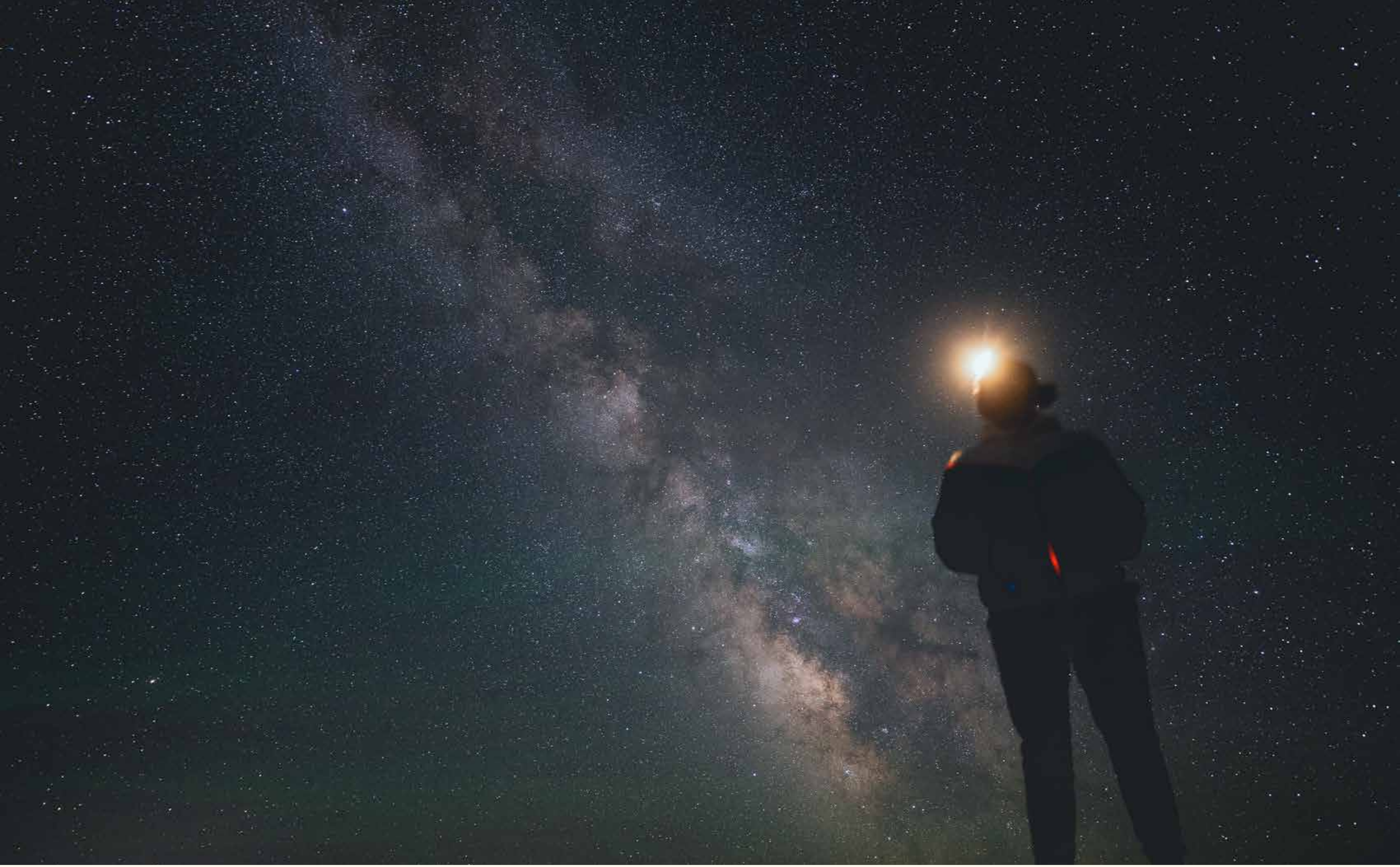

Idaho, 2021